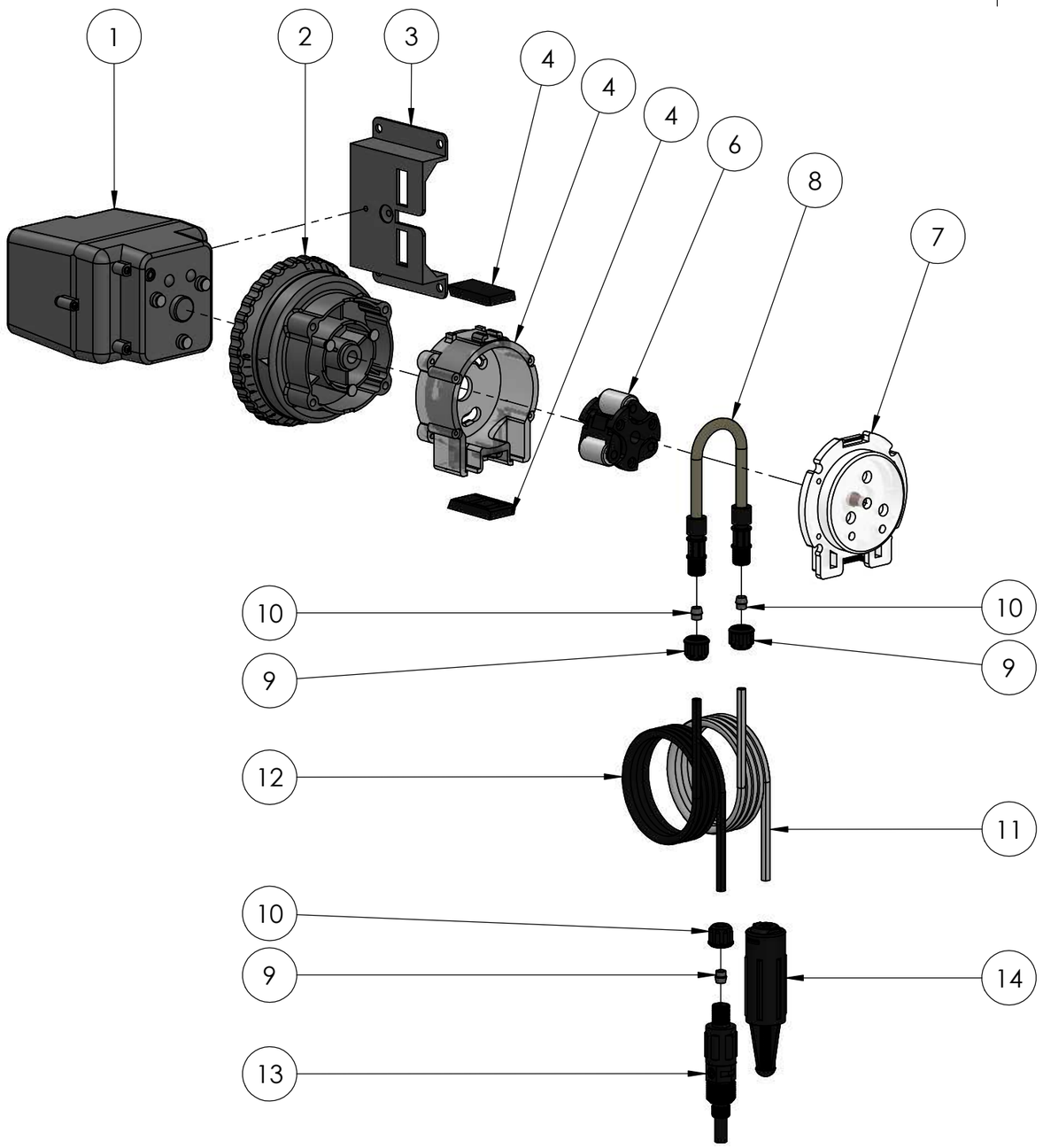

ITEM NO.	PART NUMBER	DESCRIPTION
1	STEN PM685NZ	Complete replacement motor assembly with lead
2	STEN FC5040D	Feed Rate Controller
3	STEN MP80000	Mounting bracket
4	STEN QP401-2	Pump head latch 2 pack
4	STEN QP400-1	Tube Housing with Latches (does not include STEN QP100-1 housing cover)
6	STEN QP500-1	Roller Assembly
7	STEN QP100-1	Tube Housing Cover
8	STEN UCCP201	Santoprene Squeeze Tube 2 pack for STEN 45MJH1K1S. Includes Ferrules and Connecting Nuts ie. #9 & 10
8A	STEN UCCP202	Santoprene Squeeze Tube 2 pack for STEN 45MJH2K1S. Includes Ferrules and Connecting Nuts ie. #9 & 10
8B	STEN UCCP205	Santoprene Squeeze Tube 2 pack for STEN 45MFL5K2S. Includes Ferrules and Connecting Nuts ie. #9 & 10
8C	STEN UCCP207	Santoprene Squeeze Tube 2 pack for STEN 45MJH7K1S, STEN 85MJH7K1S. Includes Ferrules and Connecting Nuts ie. #9 & 10
9	STEN MCAK100-2PK	Replacement Connecting nut 1/4", 2 per Pack
10	STEN MCAK200-2PK	Grey Stenner Ferrules for 1/4" suction or discharge tubing, 2 per Pack
11	STEN AK4010W	White tubing 1/4", 100 ft roll
12	STEN AK4010B	Black tubing 1/4", 100 ft roll (Either Black or White can be used)
13	STEN MCDBINJ-1PK	Stenner injection fitting. Includes Ferrule and Connecting Nut ie. #9 & 10
14	STEN ST114	Weighted suction strainer suitable for 1/4" or 6mm suction tubing

COMPATIBLE MODELS	
STEN 45MJH1K1S	STEN 85MFL5K2S
STEN 45MJH2K1S	STEN 85MJH1K1S
STEN 45MJH7K1S	STEN 85MJH7K1S
STEN 170JL5K1S	STEN 85MJL5K1S

Convergent Water Controls

DATE	Details	ISSUED BY	APPROVED BY
13/05/2026	Release Information	Admin	LF

NOTE
Only use written dimensions. Dimensions are in Millimeters unless otherwise specified. Do not scale. If in doubt consult with Convergent Water Controls

COPYRIGHT
The designs, concepts & specifications within this drawing are the property of Convergent Water Controls Pty Ltd. They must not be copied or reproduced wholly or in part without written consent from Convergent Water Controls Pty Ltd.

PRODUCT: STEN 45MJH1K1S

DRAWING TYPE: Spare Parts

DRAWING No: STEN 45MJH1K1S_ASM

Revision: 2

SHEET SIZE: A3

SHEET: 1 OF 1

SCALE: 1:4

FILE: C:\CWC\Library\Products From Suppliers\Stenner\Stenner Classic

MATERIAL: Misc

MASS: 1565.60 grams

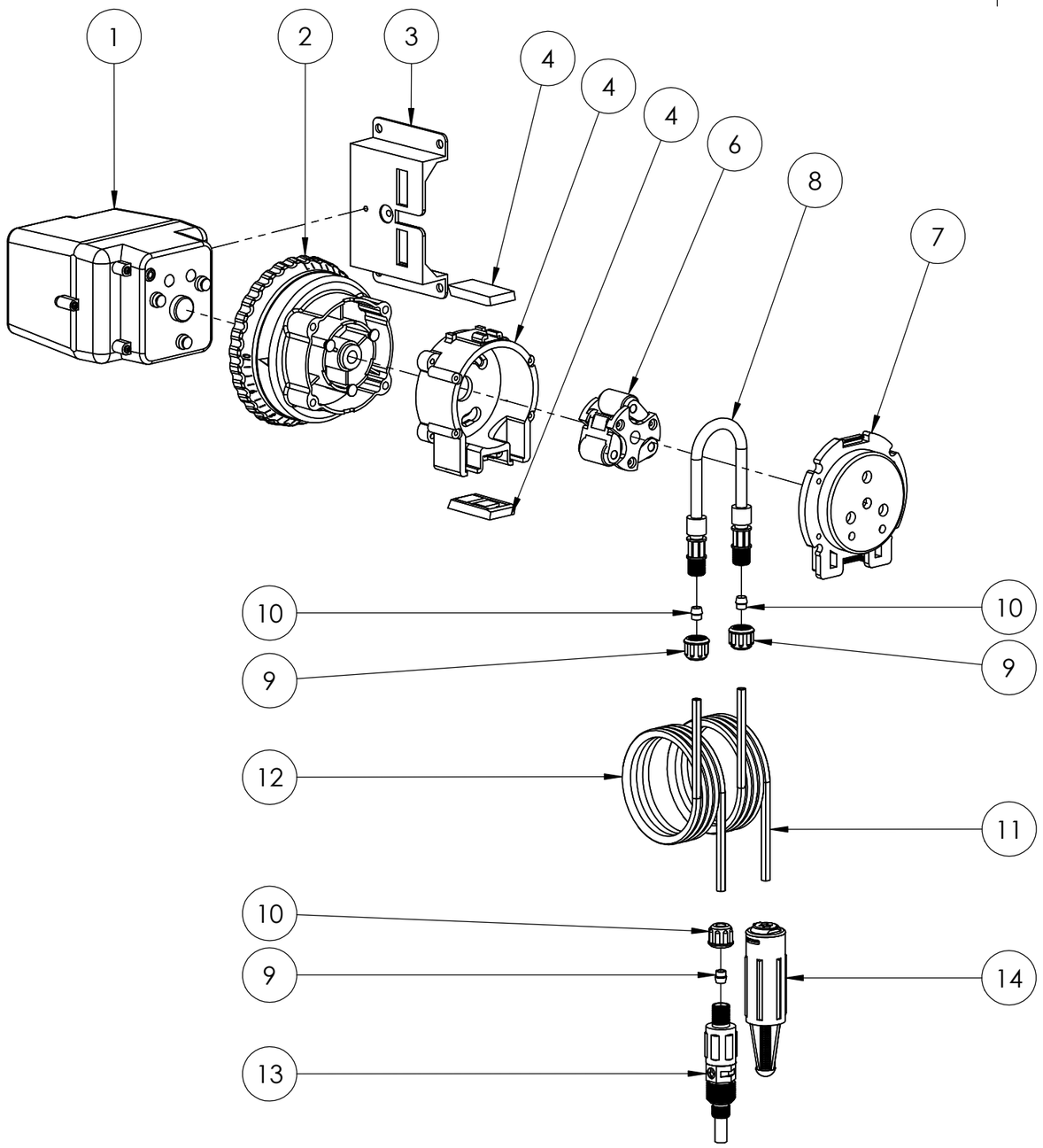

ITEM NO.	PART NUMBER	DESCRIPTION
1	STEN PM685NZ	Complete replacement motor assembly with lead
2	STEN FC5040D	Feed Rate Controller
3	STEN MP80000	Mounting bracket
4	STEN QP401-2	Pump head latch 2 pack
4	STEN QP400-1	Tube Housing with Latches (does not include STEN QP100-1 housing cover)
6	STEN QP500-1	Roller Assembly
7	STEN QP100-1	Tube Housing Cover
8	STEN UCCP201	Santoprene Squeeze Tube 2 pack for STEN 45MJH1K1S. Includes Ferrules and Connecting Nuts ie. #9 & 10
8A	STEN UCCP202	Santoprene Squeeze Tube 2 pack for STEN 45MJH2K1S. Includes Ferrules and Connecting Nuts ie. #9 & 10
8B	STEN UCCP205	Santoprene Squeeze Tube 2 pack for STEN 45MFL5K2S. Includes Ferrules and Connecting Nuts ie. #9 & 10
8C	STEN UCCP207	Santoprene Squeeze Tube 2 pack for STEN 45MJH7K1S, STEN 85MJH7K1S. Includes Ferrules and Connecting Nuts ie. #9 & 10
9	STEN MCAK100-2PK	Replacement Connecting nut 1/4", 2 per Pack
10	STEN MCAK200-2PK	Grey Stenner Ferrules for 1/4" suction or discharge tubing, 2 per Pack
11	STEN AK4010W	White tubing 1/4", 100 ft roll
12	STEN AK4010B	Black tubing 1/4", 100 ft roll (Either Black or White can be used)
13	STEN MCDBINJ-1PK	Stenner injection fitting. Includes Ferrule and Connecting Nut ie. #9 & 10
14	STEN ST114	Weighted suction strainer suitable for 1/4" or 6mm suction tubing

COMPATIBLE MODELS	
STEN 45MJH1K1S	STEN 85MFL5K2S
STEN 45MJH2K1S	STEN 85MJH1K1S
STEN 45MJH7K1S	STEN 85MJH7K1S
STEN 170JL5K1S	STEN 85MJL5K1S

Convergent Water Controls

DATE	Details	ISSUED BY	APPROVED BY
13/05/2026	Release Information	Admin	LF

NOTE
Only use written dimensions. Dimensions are in Millimeters unless otherwise specified. Do not scale. If in doubt consult with Convergent Water Controls

COPYRIGHT
The designs, concepts & specifications within this drawing are the property of Convergent Water Controls Pty Ltd. They must not be copied or reproduced wholly or in part without written consent from Convergent Water Controls Pty Ltd.

PRODUCT: STEN 45MJH1K1S

DRAWING TYPE: Spare Parts - Wireframe

DRAWING No: STEN 45MJH1K1S_ASM

Revision: 2

SHEET SIZE: A3

SHEET: 1 OF 1

SCALE: 1:4

FILE: C:\CWC\Library\Products From Suppliers\Stenner\Stenner Classic

MATERIAL: Misc

MASS: 1565.60 grams